Giant Magellan Telescope Integral Field Spectrograph

GMTIFS

서울대학교 천문학과
양희수, 이광호

- European Southern Observatory
  - VLT
    - VIMOS (Visual and IR Multi-Object Spectrograph)
    - FLAMES + Giraffe
    - SINFONI
  - Gemini North and South
    - GMOS (Gemini Multi-Object Spectrograph)
    - North only
    - NIFS (Near-IR Integral Field Spectrograph)
    - GNIRS (Gemini Near-Infrared Spectrograph)
- Keck
    - OSIRIS
- Subaru
    - Kyoto 3DII (Kyoto Tridimensional Spectrograph II)
- Observatorio del Roque de los Muchachos (La Palma)
  - WHT
    - Integral
    - OASIS
    - SAURON
    - GHaFaS (Galaxy Hα Fabry-Pérot System)
- McDonald Observatory (Texas, USA)
  - 2.7m Harlan J. Smith Telescope
    - VIRUS-P
    - VIRUS-W
- 2.2m Univeristy of Hawaii
- SNIFS
- CFHT (Canada France Hawaii Telescope)
- GriF
- Kitt Peak
- WIYN (Wisconsin, Indiana, Yale, NOAO) 3.8-m telescope
- DensePak
- SparsePak
- KPNO 4m
- FISICA (Florida Image Slicer for Infrared Cosmology & Astrophysics)
- Calar Alto
- 3.5-m Telescope
- PMAS (Potsdam Multi-Aperture Spectrophotometer)
- PPAK
- AAO
- SPIRAL + AAOmega
- Mount Palomar
- PIFS
- Observatoire du mont Mégantic 1.6-m
- FaNTOmM (Fabry-Perot de Nouvelle Technologie pour l'Observatoire du mont Mégantic)
- WIRO (Wyoming Infrared Observatory)
- WIRO-Spec
- Magellan I
- IMACS

GMTIFS Light path

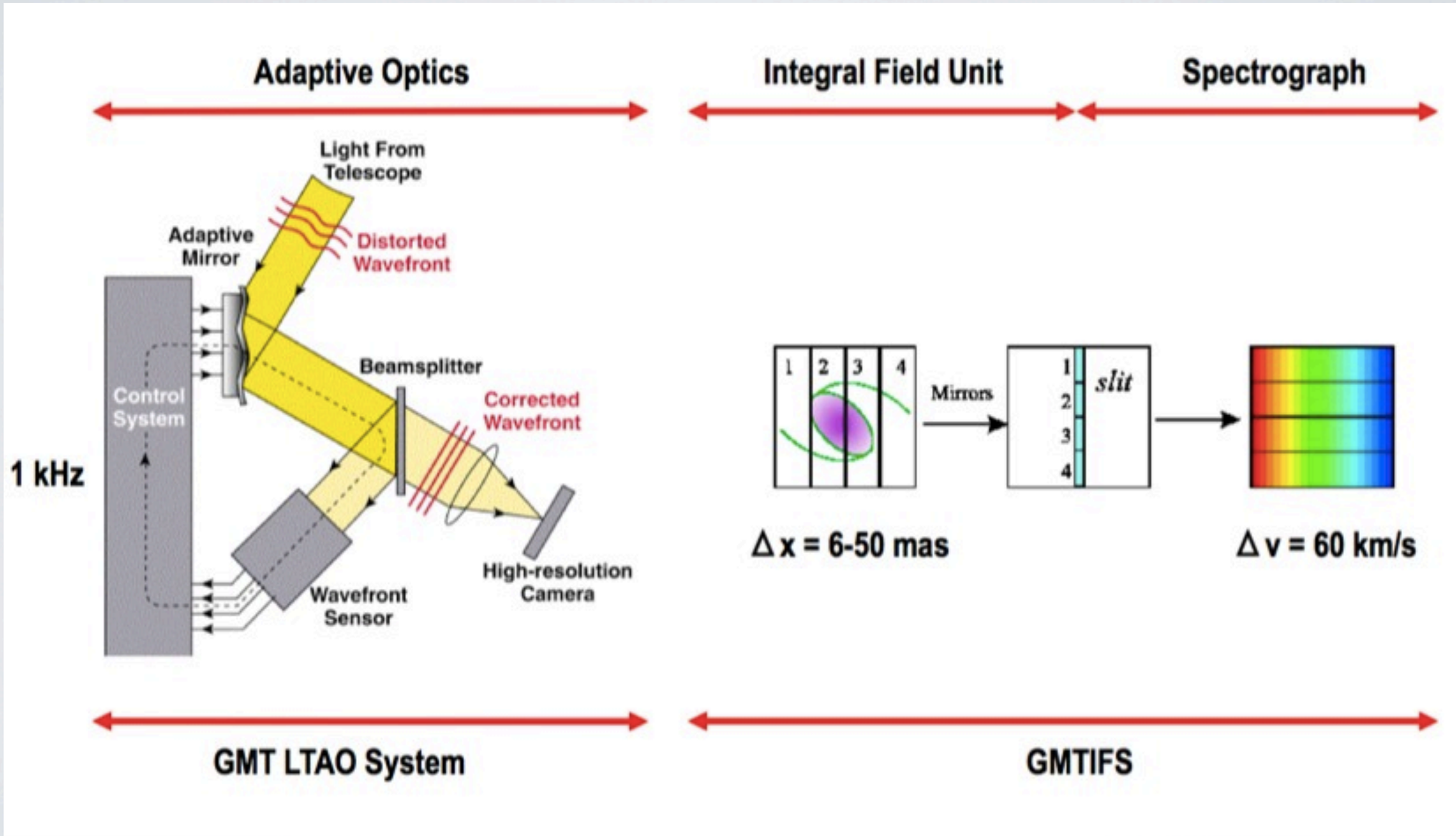

GMTIFS Image slicer

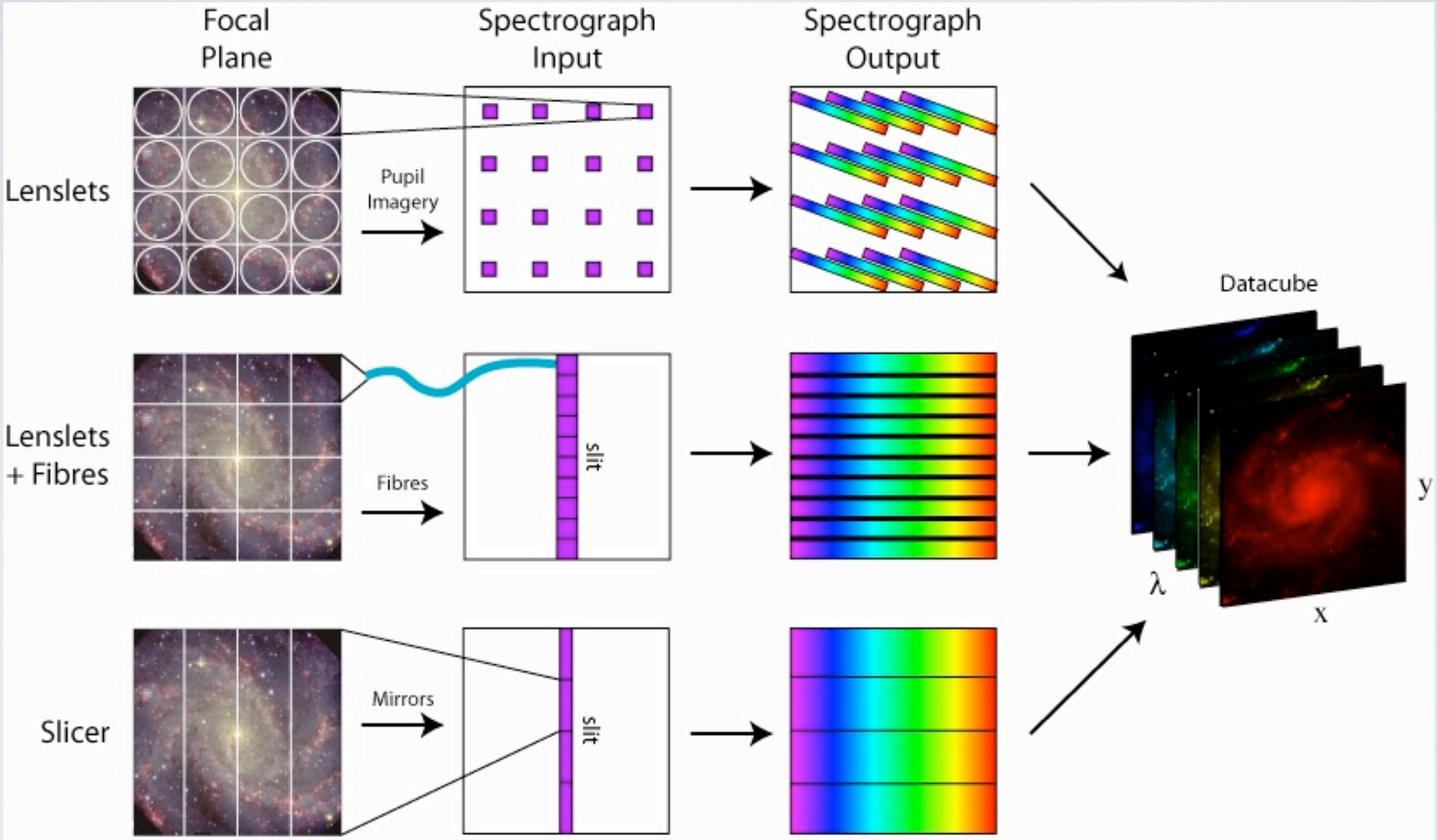

VLT / SINFONI Image slicer

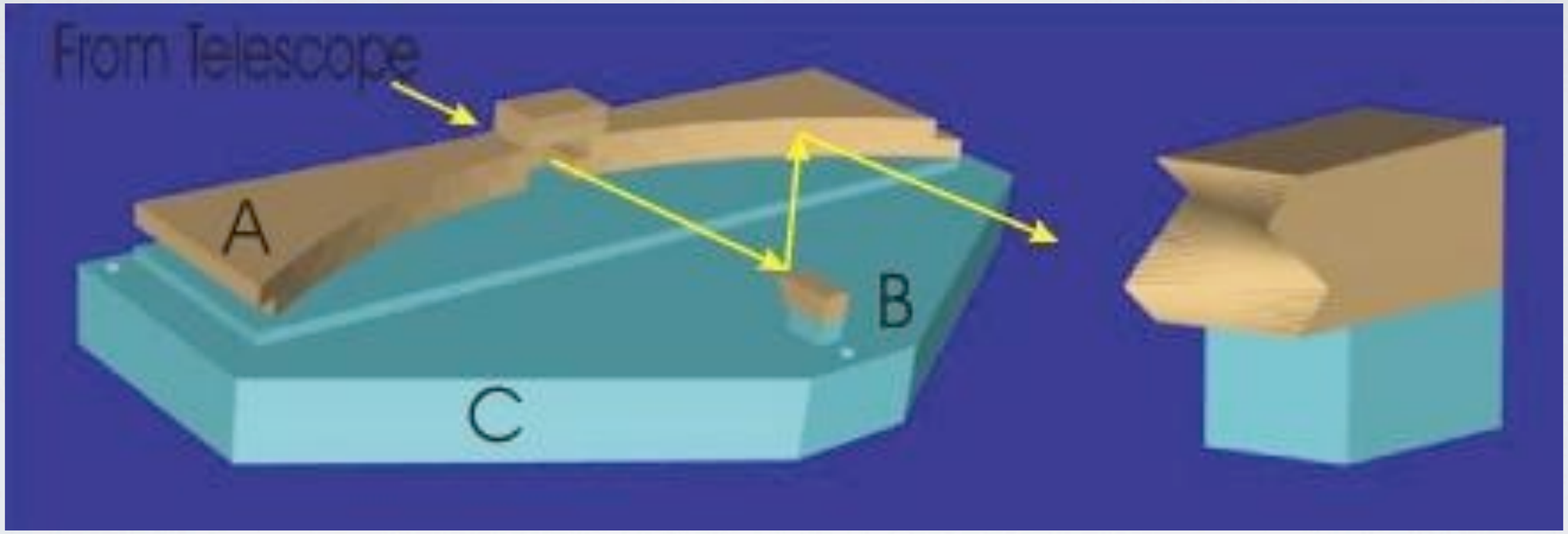

GMTIFS Light path

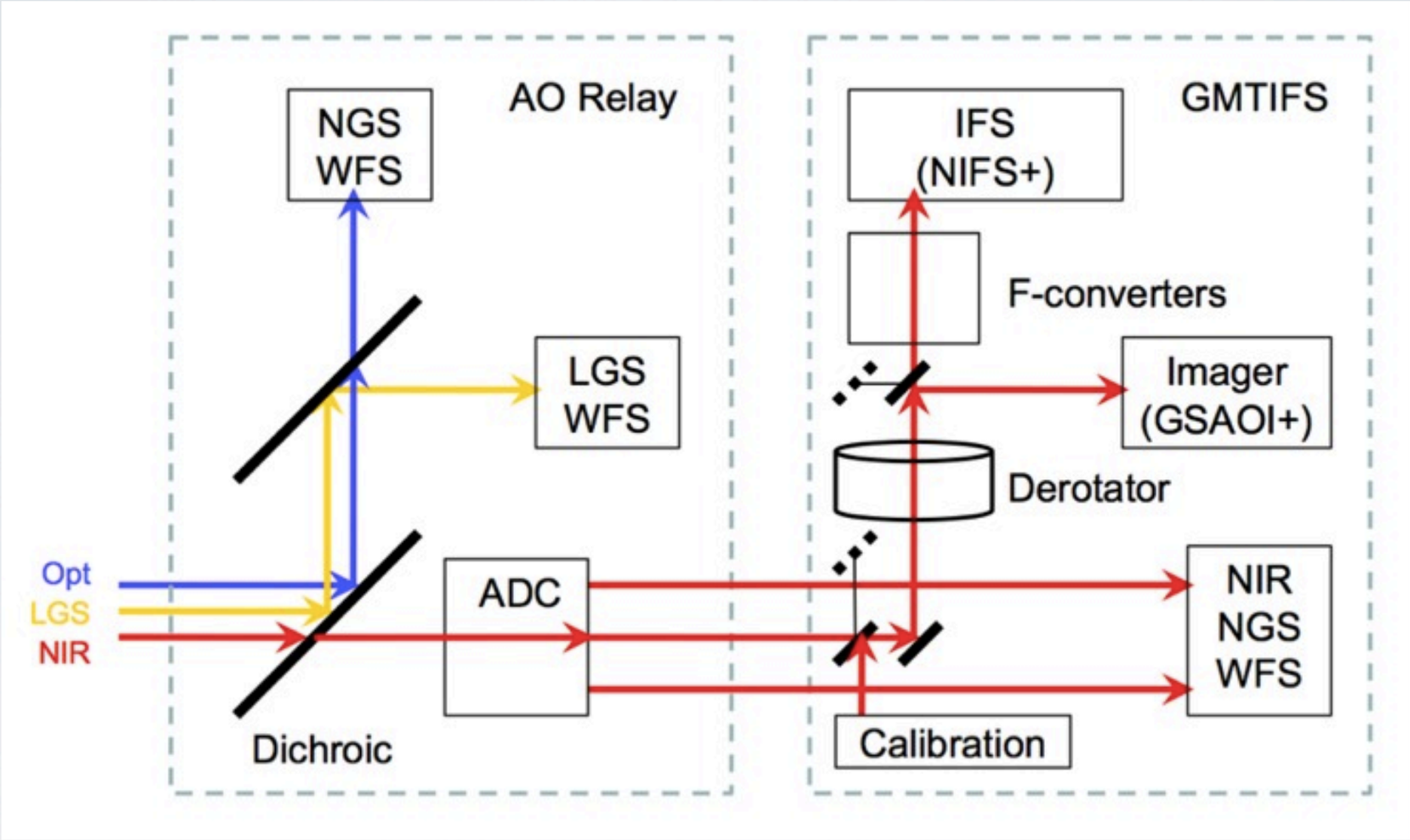

GMTIFS Capability

JHK Integral Field Spectrograph -image slicer system

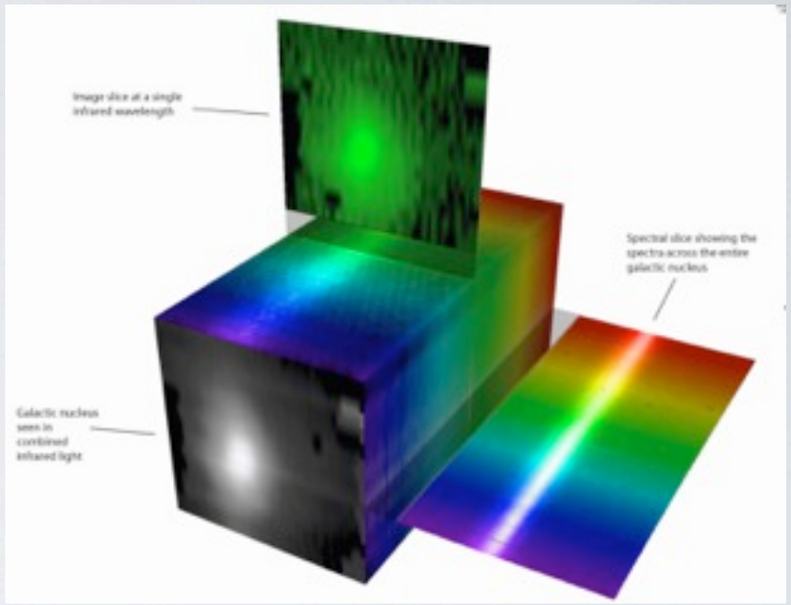

- Spectral resolution: R~5,000 or 10,000
- Data cube : 45(slit)X88(slit height)X4096(spectral)
- spatial scale

pixel size(mas)	6	12	25	50
FOV(arcsec)	0.54X0.27	1.08X0.54	2.25X1.13	4.5X2.25

Near-IR AO Imager:

- 5mas/pixel
- FOV 20.4”X20.4”
- Dual filter wheel (~16 filters)

GMTIFS Spectral Coverage

Grating	Range(um)	R	dV(km/s)
mZJ	0.89-1.35	5,000	60
mJH	1.19-1.80	5,000	60
mHK	1.64-2.49	5,000	60
hZ	0.92-1.13	10,000	30
hJ	1.10-1.35	10,000	30
hH	1.47-1.80	10,000	30
hK	2.04-2.51	10,000	30

	OSIRIS Keck	SINFONI VLT	NIFS Gemini	GMTIFS
Wavelength coverage	1.0-2.4	1.1-2.45	0.94-2.4	0.9-2.5
R	~3800	1500-4000	5000-6000	5000 or 10000
FOV	0.32X1.28asc ~ 4.8X6.4asc	0.8X0.8asc 3X3asc 8X8asc	3X3asc	0.54X0.27, 1.08X0.54 2.25X1.13, 4.5X2.25
AO Option	LGS/NGS	LGS/NGS LGS/NGS no AO	LGS/NGS	LGS/NGS
Spatial Elements size (mili-asc/pixel)	20, 35, 50, 100	12.5X25 50X100 125X250	103X40	6, 12, 25, 50
	Lenslet	Image slicer	Image slicer	Image slicer

	JWST	E-ELT EAGLE	E-ELT HARMONI	TMT IRIS	GMTIFS
Wavelength coverage	5-28	0.8-2.45 J, H, K	0.47-2.45	0.8-2.5	0.9-2.5 ZJ, JH, HK, Z, J, H, K
R	~3000	8000	4000-20000	4000	5000 or 10000
FOV(asc)	3X3	1.65X1.65	0.5X1.0, 1.25X1.5, 2.5X5, 5X10	0.064X0.512 ~ 2.2X4.55	0.54X0.27, 1.08X0.54 2.25X1.13, 4.5X2.25
Spatial Elements size (mili-asc/pixel)	100	37.5	4, 10, 20, 40	4~50	6, 12, 25, 50
concept	4 image slicer	20 IFUs		shared by lenslet and slicer	Image slicer

GMTIFS Science case

1. Assembly of Galaxies
    - Chemical Evolution of Galaxies
    - Morphological Evolution of Galaxies
    - Kinematics Mapping
    - Role of Gravitational Lenses
2. Activity of Galaxies
    - AGN Feedback
    - Circumnuclear Regions of AGN
    - Black-Hole Mass Scaling Relation
3. Planets and their formation
    - Circumstellar disks
    - Jet outflows

Near-IR AO Imager

Filter	λ_c (μm)	$\Delta\lambda$ (μm)	50% cut-on	50% cut-off
Z	1.015	0.170	0.930	1.100
J	1.250	0.160	1.170	1.330
H	1.635	0.290	1.490	1.780
Kn	2.150	0.320	1.990	2.310
K	2.200	0.340	2.030	2.370

Filter	λ_c (μm)	$\Delta\lambda$ (μm)	50% cut-on	50% cut-off
Zs	0.973	0.085	0.930	1.015
Zl	1.058	0.085	1.015	1.100
Js	1.210	0.080	1.170	1.250
Jl	1.290	0.080	1.250	1.330
Hs	1.563	0.145	1.490	1.635
Hl	1.708	0.145	1.635	1.780
Ks	2.115	0.170	2.030	2.200
Kl	2.285	0.170	2.200	2.370